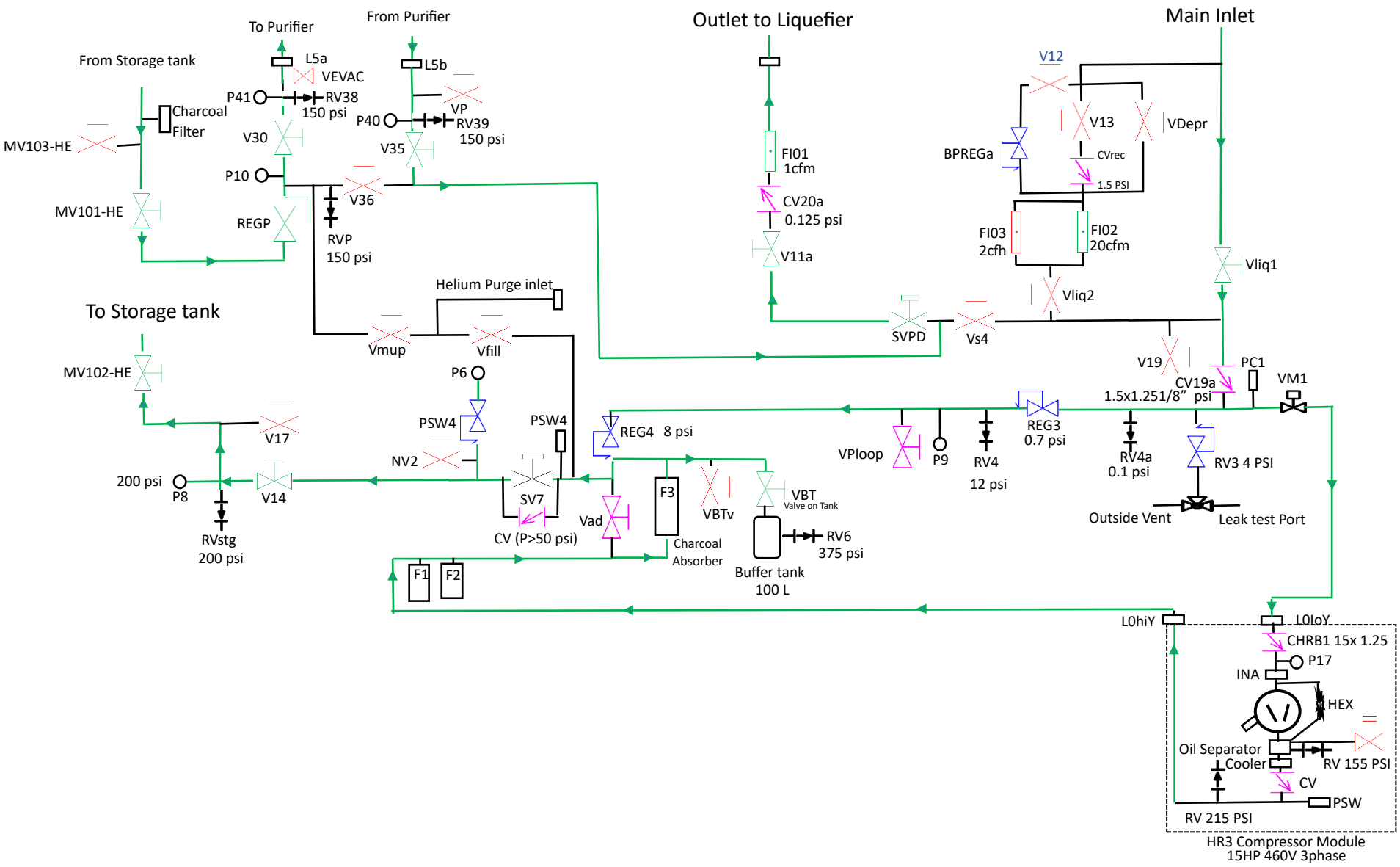
To Purifier
From Purifier
Outlet to Liquefier
Main Inlet
From Storage tank
L5a
VEVAC
L5b
P41
RV38
150 psi
VP
P40
RV39
150 psi
Charcoal
Filter
MV103-HE
V30
V35
P10
V36
MV101-HE
REGP
RVP
150 psi
V12
V13
VDepr
BPREGa
CVrec
1.5 PSI
FI01
1cfm
CV20a
0.125 psi
V11a
FI03
2cfh
FI02
20cfm
Vliq1
Vliq2
Helium Purge inlet
To Storage tank
Vmup
Vfill
SVPD
Vs4
V19
PC1
CV19a
1.5x1.251/8" psi
VM1
MV102-HE
P6
REG3
0.7 psi
PSW4
PSW4
REG4 8 psi
VPloop
P9
RV4
12 psi
RV4a
0.1 psi
RV3 4 PSI
V17
NV2
200 psi
P8
V14
SV7
CV (P>50 psi)
Vad
F3
VBTv
VBT
Valve on Tank
Outside Vent
Leak test Port
RVstg
200 psi
Charcoal
Absorber
RV6
375 psi
Buffer tank
100 L
F1
F2
L0hiY
L0loY
CHRB1 15x 1.25
P17
INA
HEX
Oil Separator
Cooler
RV 155 PSI
CV
PSW
RV 215 PSI
HR3 Compressor Module
15HP 460V 3phase